KK-Ex
AKK-Ex

Asynchronmotoren Serie KK-Ex und AKK-Ex mit eingebauter Bremse fuer Ex-Hubanlage

- ***Modifikationen Spannung nach, 50 Hz/60 Hz***
- ***Isolierklasse F***
- ***Wellenaxialgang 0,5÷1,0 mm***
- ***IP 44, IP54 der Bremse (EN60529)***
- ***Flanschausfuehrung***
- ***Mit eingebaute Thermoschutz***
- ***Ex-Undurchlaessigeausfuehrung***

Anwendung: Fuer Ex-Hubwerke

Asynchronous electric motors KK-Ex and AKK-Ex series with built-in brake, for explosion-proof traveling mechanisms

- ***Voltage modifications, 50 Hz/60 Hz***
- ***Insulation class F***
- ***Axial shaft run 0,5÷ 1,0 mm***
- ***IP 44 / IP 54 (EN60529)***
- ***Flange joining***
- ***Overheat protection***
- ***Explosive atmospheres and marking according to EN5018 Ex (d) IIBT5, EX (d) IIC T5***

Applications: For explosion-proof traveling mechanisms



Nenndaten / Rated data

Leistung Power	Typ Type	Drehzahl Rotation speed	Spannung Voltage	Arbeitstregime Duty cycle		Strom Current	Startmoment Starting torque	Brems-moment Braking torque	Gewicht Weight
				CD	SF				
kW	-	min^{1}	V	%	h^{-1}	A	Nm	Nm	kg
0.12	KK1404-6AEx	910	400	40	240	0.75	2.8	1.1	24
0.18	KK1305-6Ex	910	400	40	240	1.0	4.2	1.1	26
0.25	KK1305P6Ex	900	400	40	240	1.1	5.2	2.2	26
0.18	KK1305B4Ex	1420	400	40	240	1.0	3.0	1.0	26
0.25	KK1305-4Ex	1390	400	40	240	1.1	4.1	1.1	26
0.37	KK1305P4Ex	1360	400	40	240	1.3	6.0	2.2	26
0.06/0.12	KK1305-12/6Ex	420/920	400	20/40	240	1.1/0.9	2.3/3.5	1.1	26
0.06/0.18	KK1305-12/4Ex	420/1420	400	20/40	240	1.1/1.0	2.3/3.5	1.1	26
0.25	KKI1305P6Ex	900	400	40	240	1.1	5.2	2.2	27
0.37	KKI1305P4Ex	1360	400	40	240	1.3	6.0	2.2	27
0.06/0.12	KKI1305-12/6Ex	420/920	400	20/40	240	1.1/0.9	2.3/3.5	1.1	27
0.06/0.18	KKI1305-12/4Ex	420/1420	400	20/40	240	1.1/1.0	2.3/3.5	1.1	27
0.25	KK1608-6AEx KK1608K6AEx	940	400	40	240	1.1	6.0	2.2	46
0.37	KK1608B6Ex	940	400	40	240	1.6	6.0	3.3	46
0.55	KK1608P6AEx KK1608KP6AEx	920	400	40	240	2.4	15.8	4	46.5
0.12/0.25	KK1608B12/6Ex	400/890	400	20/40	240	1.3/1.1	6.0/6.0	3	46.5
0.12/0.37	KK1608B12/4Ex	400/1380	400	20/40	240	1.12/1.2	6.0/5.0	3	46.5
0.25/0.55	KK1608-12/6Ex	400/920	400	20/40	240	2.1/2.2	11.0/14.0	4	46.5
0.25/0.75	KK1608-12/4Ex	400/1350	400	20/40	240	2.1/2.0	11.0/11.0	4	46.5
0.75	KK1605-6Ex	910	400	40	240	3.3	16.5	8.0	41
1.1	KK1605-4Ex	1360	400	40	240	3.6	15.0	8.0	41
0.18	AKK1305-6Ex	910	400	40	240	1.0	4.2	1.1	27
0.25	AKK1305P6Ex	900	400	40	240	1.1	5.2	2.2	27
0.18	AKK1305B4Ex	1420	400	40	240	1.0	3.0	1.0	27
0.25	AKK1305-4Ex	1390	400	40	240	1.1	4.1	1.1	27
0.37	AKK1305P4Ex	1360	400	40	240	1.3	6.0	2.2	27
0.06/0.18	AKK1305-12/4Ex	420/1420	400	20/40	240	1.1/1.0	2.3/2.6	1.1	27
0.06/0.12	AKK1305-12/6Ex	420/920	400	20/40	240	1.1/0.9	2.3/3.5	1.1	27
0.25	AKK1608-6Ex	940	400	40	240	1.1	6.0	2.2	46.5
0.37	AKK1608B6Ex	940	400	40	240	1.6	6.0	3.3	46.5
0.12/0.25	AKK1608B12/6Ex	400/890	400	20/40	240	1.3/1.1	6.0/6.0	3	46.5
0.12/0.37	AKK1608B12/4Ex	400/1380	400	20/40	240	1.3/1.2	6.0/5.0	3	46.5
0.37	AKK1608-4Ex	1410	400	40	240	1.2	15.0	3.3	46.5
0.55	AKK1608P6Ex	940	400	40	240	1.1	6.0	2.2	47
0.25/0.75	AKK1608-12/4Ex	400/1350	400	20/40	240	2.1/2.0	11.0/11.0	4	47
0.25/0.55	AKK1608-12/6Ex	400/920	400	20/40	240	2.1/2.2	11.0/14.0	4	47
0.75	AKK1605-6Ex	910	400	40	240	3.3	16.5	8.0	41
1.1	AKK1605-4Ex	1360	400	40	240	3.6	15.0	8.0	41
30	AKII1609-4Ex	1350	400	40	240	7.0	42.0	20.0	54
1.5	AKII1608-6Ex	910	400	40	240	3.8	30	10.5	47
2.2	AKII1608P6Ex	910	400	40	240	6.5	45	17	54
0.5/1.5	AKII1609-12/4Ex	460/1410	400	20/40	240	3.8/3.5	17.5/20.5	11	54

Anschlussmasse / Overall dimensions

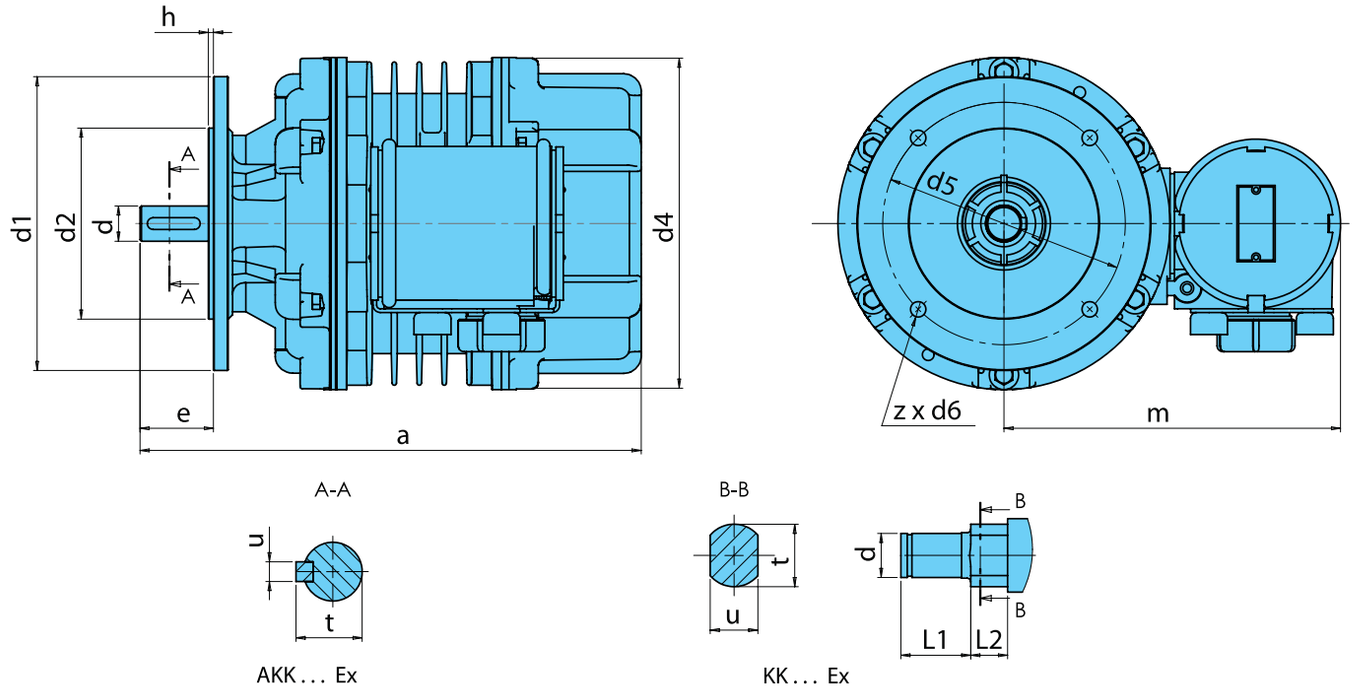

Typ / Type	Abmessungen / Dimensions									Welle / Shaft				
	a	e	h	m	d1	d2	d4	d5	z x d6	d	L1	L2	t	u
KK1404 Ex	250	29.5	6	202	135	60	170	120	3x9	10	19	7	17	11
KK1305 Ex	280								3x7					
KKI1305 Ex	299	35.5	5	202	165	100	170	150	3x9	12	19	10	17	13
KK1608 Ex	325	35.5	5	225	165	100	226	150	3x9	12	19	10	17	13
KK1605 Ex														
AKK1305 Ex	302	40	3.5	202	200	130	170	165	4x11	19	-	-	21.5	6
AKK1608-6Ex	335	40	3.5	225	200	130	226	165	4x10.5	19	-	-	21.5	6
AKK1608B6Ex														
AKK1608B12/4Ex														
AKK1608-4Ex														
AKK1608P6AEx	345	50	3.5	225	200	130	226	165	4x10.5	24	-	-	27	8
AKK1608-12/4Ex														
AKK1608-12/6Ex														
AKK1605-6Ex														
AKK1605-4Ex														
AKII1608-6Ex														
AKII1608P6Ex	367	60	4	225	250	180	226	215	4x15	28	-	-	31	8
AKII1609-12/4Ex														