Asynchronmotoren Serie KV-Ex fuer Hubwerke der Ex-Zuege

- *Modifikationen Spannung nach, 50 Hz / 60 Hz*
- *Isolierklasse F*
- *Wellenaxialgang 0,5÷1,0 mm*
- *IP 44, IP54 der Bremse (EN60529)*
- *Flanschausfuehrung*
- *Mit eingebautem Thermoschutz*
- *Ex-Undurchlaessigeausfuehrung EN5018 Ex (d) IIBT5, EX (d) IIC T5*

Anwendung: Hubwerk bei Ex-Zuegen

Asynchronous electric motors KV-Ex series for main lifting mechanism of explosion-proof electric hoists

- *Voltage modifications, 50 Hz / 60 Hz*
- *Insulation class F*
- *Axial shaft run 0,5÷1,0 mm*
- *IP 44 (EN60529)*
- *Flange mount*
- *Overheat protection*
- *Explosive atmospheres and marking according to EN5018 Ex (d) IIBT5, EX (d) IIC T5*

Applications: Main lifting mechanism of explosion-proof electric hoists

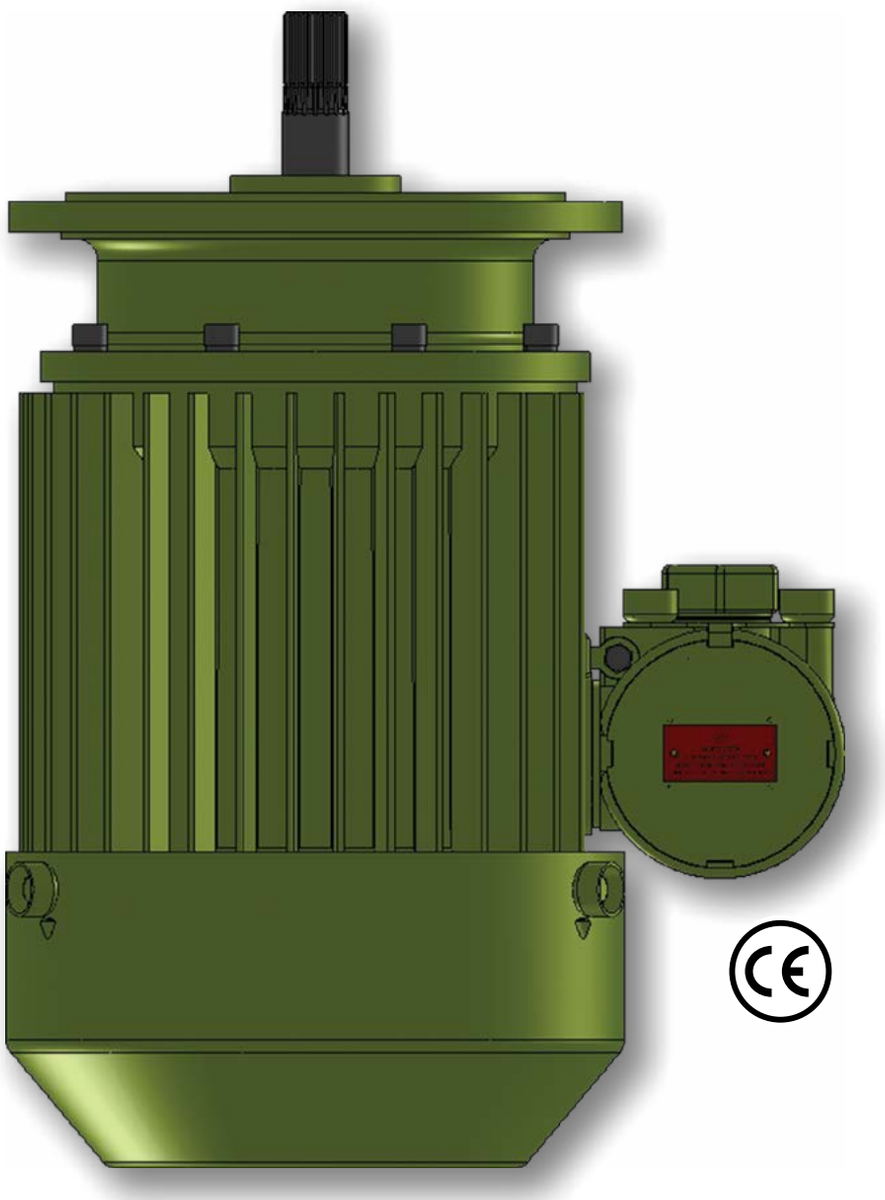

Nenndaten / Rated data

Leistung Power	Typ Type	Drehzahl Rotation speed	Spannung Voltage	Arbeitstregime Duty cycle		Strom Current	Start moment Starting torque	Brems-moment Braking torque	Gewicht Weight
				CD	SF				
kW		min^{-1}	V	%	h^{-1}	A	Nm	Nm	kg
0.75	KV0501-6Ex	910	400	40	240	3.3	16.4	10.8	40
1.1	KV0501-4Ex	1360	400	40	240	3.6	15	18	40
0.25/0.75	KV0504-12/4Ex	430/1360	400	20/40	240	3.0/3.0	11.0	8.0	46
1.5	KV1001-6Ex	910	400	30	180	5.8	25	23.5	45
2.5	KV1001-4Ex	1300	400	30	180	6.5	26	28	45
0.33/1.5	KV1005-24/6Ex	200/930	400	20/40	240	3.7/5.0	29	30	82.5
0.33/2.2	KV1005-24/4Ex	200/1400	400	20/40	240	3.7/6.2	29	30	82.5
0.5/1.5	KV1004-12/4Ex	460/1430	400	15/30	180	5.0/6.0	22/26	20	54
3.0	KV2002-6Ex	930	400	30	180	9.0	60	43	70
4.5	KV2001-4Ex	1400	400	30	180	12.0	60	78	70
6.0	KV2003-4Ex	1420	400	40	240	14.5	135	55	120
0.7/3.0	KV2003-24/6Ex	210/930	400	20/40	240	6.5/7.5	55	48	120
0.7/4.5	KV2003-24/4Ex	210/1400	400	20/40	240	6.5/9.5	55	55	120
4.5	KV3005-6Ex	920	400	40	240	12.5	78	78	80
8.0	KV4005-6Ex	920	400	40	240	20.0	150	1 10	148
12.0	KV4005-4Ex	1420	400	40	240	27.5	215	1 10	148
1.7/8.0	KV4003-24/6Ex	200/920	400	20/40	240	15.0/18.0	140	170	215
1.7/12.5	KV4003-24/4Ex	200/1430	400	20/40	240	15.0/23.0	140	170	215
13.0	KV5005-6Ex KV6005-6Ex	920	400	40	240	26.0	360	225	241
20.0	KV5005-4Ex KV6005-4Ex	1360	400	40	240	38.0	360	225	241
1.7/8.0	KV6005-24/6Ex	200/920	400	20/40	240	15.0/18.0	140	170	241
1.7/12.5	KV6005-24/4Ex	200/1430	400	20/40	240	15.0/23.0	140	170	241
2.0/15.5	KV6005P24/4Ex	210/1400	400	10/40	240	16.0/33.0	152/280	170	241
2.2/10.0	KV6005P24/6Ex	200/920	400	13/27	240/120	19.0/22.5	140	170	241

ED / CD - Arbeitsregime / Cyclic duration factor
c/h / SF – Einschaltungen pro Stunde/ Number of switches per hour

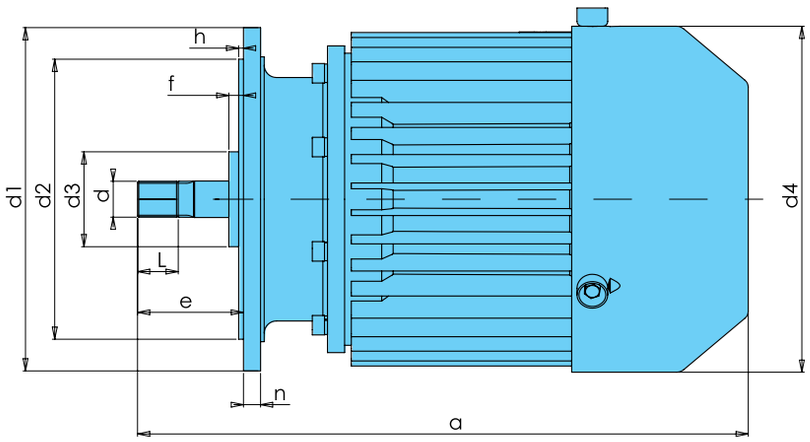

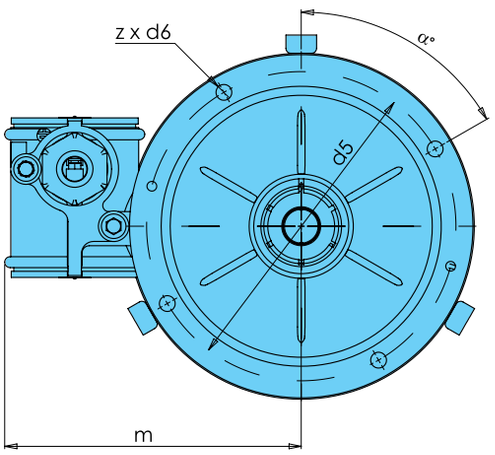

Anschlussmasse / Overall dimensions

Typ / Type	Abmessungen / Dimensions													Welle / Shaft	
	a	**e**	**n**	**f**	**h**	**m**	**d1**	**d2**	**d3**	**d4**	**d5**	**Zxd6**	**a**	**d**	**L**
KV0501 KV0504 KV1001	358	67	10		3.5	229	200	130		226	165	4x10.5	45	25x1.5x16S3aX	27
KV1005	516	67	14	12	4	250	250	180	78	284	230	4x9	45	25x1.5x16S3aX	27
KV1004	389	67	14	-	4	229	250	180	-	226	215	4x13	45	25x1.5x16S3aX	27
KV2002 KV2001	501	87	14	12	4	250	282	230	78	284	254	4x13	60	30x1.5x18S3aX	32
KV2003	574	87	17	30	4	278	300	230	78	350	316	4x13	45	30x1.5x18S3aX	32
KV3005	531	87	14	12	4	250	282	230	78	284	254	4x13	60	30x1.5x18S3aX	32
KV4005	593	67	19	15	4	278	368	250	108	350	332	4x19	9	40x2.0x18S3aX	32
KV4003	653	67	19	20	4	328	368	250	108	416	332	4x19	9	40x2.0x18S3aX	32
KV5005 KV6005	662	63	22	8	5	328	495	362	1 18	416	440	4x19	45	45x2.5x16S3aX	37