Asynchronmotoren, Serie KKT mit eingebauter Bremse fuer Hubanlage,Serie T

- *Modifikationen Spannung nach, 50 Hz / 60 Hz*
- *Isolierklasse F, Moegliche Ausfuehrung H*
- *Arbeitsregime, Bestellung nach: 25%/150h-1, 30%/180h-1oder 10/25%/180h-1*
- *Wellenaxialgang 0,5÷1,0 mm*
- *IP 54, IP22 der Bremse (EN60529)*
- *Flanschausfuehrung-IM B5 (EN 60034-7)*
- *Moeglichkeit um Thermoschutz einzubauen*

Anwendung: Antrieb der Hubwerke

Asynchronous electric motors KKT series with built-in brake for traveling mechanisms T series

- *Voltage modifications, 50 Hz / 60 Hz*
- *Insulation class F, optional H*
- *On request the duty cycle could be: 25%/150 h^{-1}, 30%/180 h^{-1} or 10/25%/180 h^{-1}*
- *Axial shaft run 0,5÷1,0 mm*
- *IP 54, brake protection IP 22 (EN 60529)*
- *Flange joining IM B5 (EN 60034-7)*
- *Optional thermal protection*

Application: For traveling mechanisms



Nenndaten / Rated data

Leistung Power	Typ Type	Drehzahl Rotation speed	Spannung Voltage	Arbeitstregime Duty cycle		Strom Current	Start moment Starting torque	Brems-moment Braking torque	Gewicht Weight
				CD	SF				
kW	**-**	**min^{-1}**	**V**	**%**	**sw/h**	**A**	**Nm**	**Nm**	**kg**
0.12	KKT63-6	860	400/230	40	120	0.85/1.5	3.2	1.2	6.9
0.25	KKT71-6	910	400/230	40	120	1.4/2.4	6.5	2.2÷3.0	11.5
0.37	KKT80-6	910	400/230	40	120	1.5/2.6	10.0	3.0	14
0.55	KKT80P6	940	400/230	40	120	2.2/3.8	13.0	3.6÷4.1	15
0.75	KKT90-6	860	400/230	40	240	3.2/5.5	14.0	6.8÷7.8	21
0.18	KKT63-4	1300	400/230	40	120	0.9/1.6	3.3	1.2	6.9
0.37	KKT71-4	1350	400/230	40	120	1.4/2.4	6.5	2.2÷3.0	11.5
0.55	KKT80-4	1350	400/230	40	120	1.8/3.1	10.0	3.5	14
0.75	KKT80P4	1360	400/230	40	120	2.2/3.8	14.0	3.6÷4.1	15
0.06/0.12	KKT I 80B12/6	450/950	400	20/40	240	0.7/0.7	2.5/2.0	1.1	13.8
0.12/0.25	KKT80-12/6	440/940	400	20/40	240	1.4/1.2	4.5/4.5	2.4÷2.8	14.5
0.18/0.37	KKT80P12/6	440/900	400	20/40	240	1.9/1.6	7.2/6.5	3.6÷4.1	15
0.37/0.75	KKT90P12/6	420/930	400	20/40	240	3.5/3.5	13.5/13.0	6.8÷7.8	24
0.06/0.18	KKT I 80B12/4	450/1400	400	20/40	240	0.7/0.6	2.5/2.2	1.1	13.8
0.08/0.25	KKT 80B12/4	450/1400	400	20/40	240	0.95/0.9	3.2/3.2	1.3÷1.6	14.5
0.12/0.37	KKT80-12/4	440/1390	400	20/40	240	1.4/1.4	4.5/4.0	2.4÷2.8	14.5
0.18/0.55	KKT80P12/4	440/1400	400	20/40	240	1.9/1.75	7.2/7.2	3.6÷4.1	15
0.25/0.75	KKT90-12/4	430/1410	400	20/40	240	2.4/2.0	9.0/9.0	4.9÷5.7	21
0.37/1.1	KKT90P12/4	420/1410	400	20/40	240	3.5/3.5	13.5/13.5	6.8÷7.8	24

Anschlussmasse / Overall dimensions

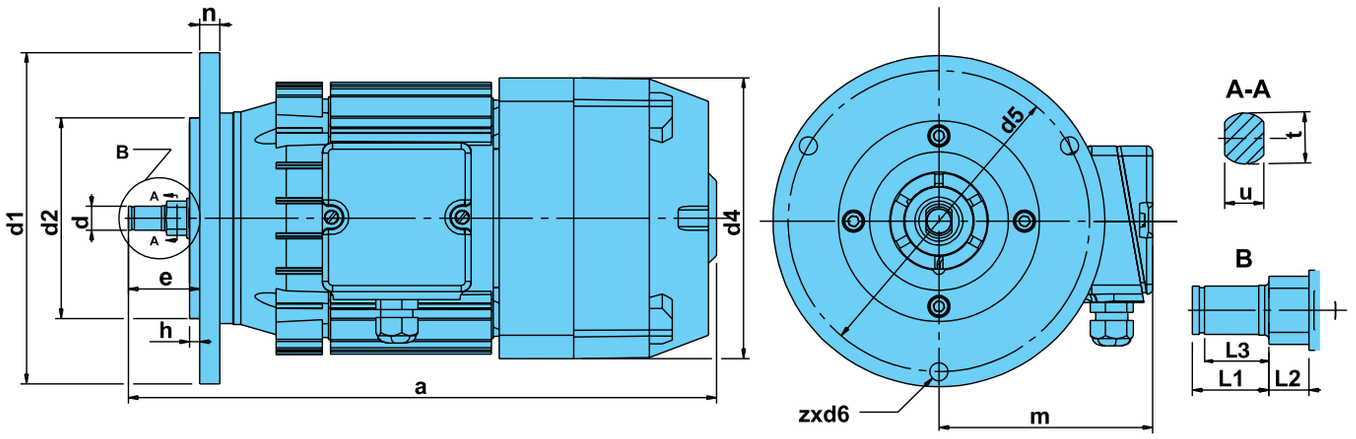

Typ / Type	Abmessungen / Dimensions [mm]										Welle / Shaft					
	a	**e**	**h**	**n**	**m**	**d1**	**d2**	**d4**	**d5**	**z x d6**	**d**	**L1**	**L2**	**L3**	**t**	**u**
KKT63	244	29.5	5	8	1 15	135	60	138	120	3x7	10	19	8	17.3	15	11
KKT71	292	35.5	5	10	1 10	165	100	140	150	3x9	12	19	10	17.3	17	13
KKT I 80	290	29.5	5	8	120	135	60	158	120	3x7	10	19	10	17.3	17	11
KKT80	310	35.5	4	10	120	165	100	158	150	3x9	12	19	10	17.3	17	13
KKT80B																
KKT80B																
KKT90	330	35.5	4	8	130	165	100	178	150	3x9	12	19	10	17.3	17	13
KKT90P	360															